Quick Relief Valve
Mod. IM-SR



Hydraulic Function

The hydraulic valve mod. IM-SR is an automatic safety valve that allows to alleviate the excessive pressure preventing the network from the effects of overpressure or water hammer.

Operation

The valve is controlled by a hydraulic pilot (mod. MR.) who determines the valve opening accordingly the pressure value in the network.
The pilot discharge totally the chamber of the valve consequently to the value of the controlled pressure.
The pilot can be adjusted to the value of wished pressure, within the limit of its regulation range.
When the pressure in the network exceeds the safety pressure, the pilot determines the immediate total opening of the valve alleviating the excess of pressure.
When the pressure in the network returns to the normal value, the pilot progressively fills the chamber until the total closing of the valve.
The speed of closing of the valve is controlled by a regulation nut factory adjusted(check Assembly Scheme).

Start-up

- install the valve in derivation to the main pipe orienting the discharge in nondangerous direction
- tighten the adjustment screw totally
- feed the network with water until arriving at the nominal checked pressure
- progressively unscrew the adjustment screw until the valve intervention
- return to tighten the screw until causing the closing of the valve
- block the adjustment screw using the block nut.

Adjustments

The screw of the pilot allows to fit the rising pressure to a value that is within its regulation range (check Technical Characteristics).
Tightening the screw in the clock sense it is increased the pressure value of intervention. Unscrewing the screw in the opposite sense it is reduced the pressure value of intervention, until the permanent opening of the valve.

Features accessories

Pilot SR PN25
Lower body: brass
Cover: brass
Pipes: copper



Identification Washer
Regulations ranges:

Blue spring	1,0÷10,0
Red spring	1,5÷22,0

Assembly

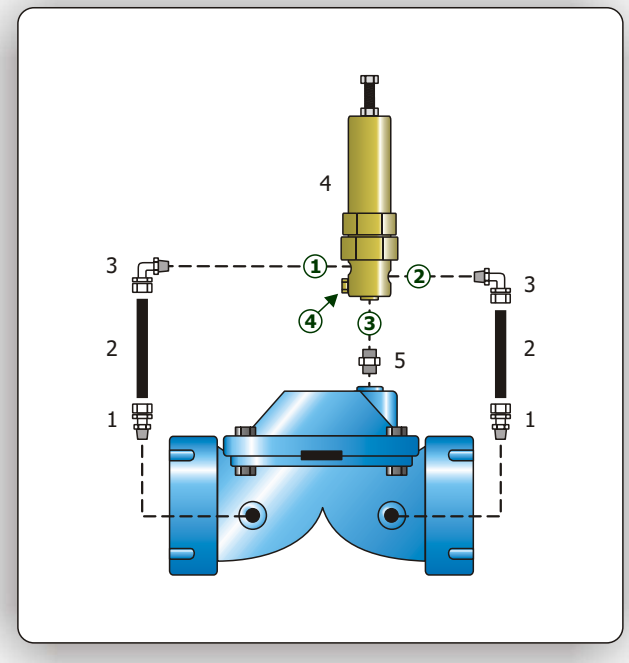

Caution

- not disassemble the valve or its circuit when the pipe is in pressure.
- not use with pressures superiors to the Nominal values.

LEGEND:
1 - Straight Ø1/4"M pipe Ø8
2 - Copper pipe Ø8
3 - Elbow Ø1/8"M pipe Ø8
4 - Pilot SR
5 - Nipple Ø1/4"M-M

① - Sense line
② - Discharge
③ - Common
④ - Regulation

NOTES:
- the technical characteristics can change without prior notice.