VKGF01 Manual Knife Gate Valve

Feature

Connection Rating:

JIS 5K JIS 10K JIS 7.5K

ANSI 150#

DIN PN10 PN16

MSS-SP81 Test Standard:

Body Test: 11kg/cm² (Water)

Seat Test: 2.8kg/cm² (Water)

Leakage: 4 cc/ per in. min.

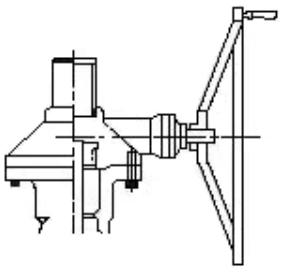

available with gear operator

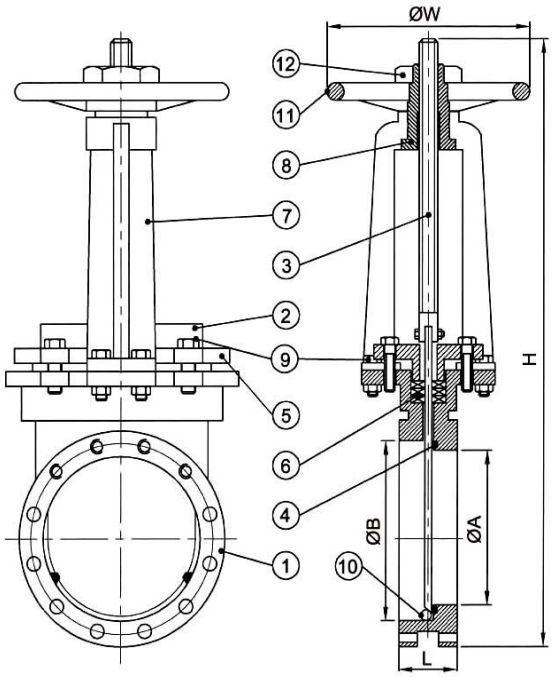



Temperature

MATERIAL	TEM. RANGE
ASBESTOS + PTFE	-50℃ ~ 550℃
SILICON	-20℃ ~ 150℃
VITON	-20℃ ~ 250℃
TEFLON	-30℃ ~ 150℃
NON ASBESTOS	-50℃ ~ 550℃

Material Option

	BODY	PLATE	SEAT	GLAND PACKING
MATERIAL	FC FCD WCB	SUS304 SUS316 SUS304L SUS316L	TEFLON METAL VITON EPDM	NON-ASB+PTFE ASB ASB+PTFE TEFLON NON ASBESTOS

Dimension

SIZE	L	ØA	ØB	W	H
2”	55	42	64	190	405
2-1/2”	55	57	80	190	420
3”	55	72	95	190	460
4”	55	92	114	220	520
5”	60	116	141	290	615
6”	60	138	161	290	685
8”	70	192	213	350	850
10”	75	232	261	350	1000
12”	80	280	315	400	1110
14”	80	345	376	400	1200
16”	90	395	425	500	1410
18”	95	445	480	500	1570
20”	120	490	520	500	1700
24”	120	590	630	500	1970
30”	120	660	720	500	3050

Material List

NO.	PART NAME	MATERIAL
1	BODY	FC FCD
2	PLATE	SUS304 ‘316
3	STEM	SUS410 ‘304 ‘316
4	SEAT	TEFLON. METAL
5	GLAND	CAST IRON
6	GLAND PACKING	ASB NON-ASB
7	YOKE	FC-FCD
8	YOKE SLEEVE	CAST BRONZE. FCD
9	BOLT NUT	MILD STEEL
10	PAWLS	CAST IRON
11	HAND WHEEL	CAST IRON
12	NUT	CAST IRON