XIAMEN SANIDENG PLASTICS INDUSTRY CO.,LTD

Add.: No.169,TongHong Road,TongAn District, XiaMen 361100, FuJian, China
Tel: 86-592-7197133 Fax: 86-592-7197120 Web: www.sanking.cn

Single Union Swing Foot Valve



ADVANTAGES:

1) New Swing type can stop water better;
2) Materials meet drinking water standard;
3) Material is Nano-modified which increases resistance to pressure and impact of product;
4) ANTI-UV absorbent is added to raw material in order to increase weather resistance and ageing resistance of product;
5) Can be assembled vertically or horizontally.

DESCRIPTION:

1) Material: UPVC, CPVC, PPH
2) Size: 1/2" - 2"; 20mm - 63mm ; DN15 - DN50
3) Standard: ANSI, DIN, JIS, CNS
4) Joint End: Socket or Threaded(NPT,PT,BSPF), Fusion, Welding
5) Working Pressure: 150 PSI
6) Operating Temperature: UPVC(5~55℃);CPVC&PPH(5~90℃);
7) Valve body color : UPVC(dark gray/white),CPVC(light gray),PPH(light yellow)
8) The minimum waterstop pressure ≥0.03kg

SPECIFICATIONS:

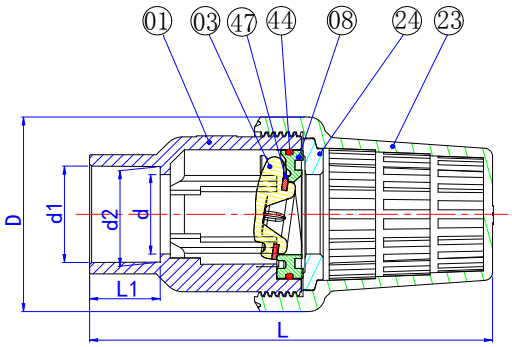

ITEM	PART	MATERIAL	QTY
47	Washer	EPDM/VITON	1
44	Oring	EPDM/VITON	1
24	Mesh enclosure washer	UPVC/CPVC/PPH	1
23	Mesh enclosure	UPVC/CPVC/PPH	1
08	Permanent seat	UPVC/CPVC/PPH	1
03	Disc	PVDF	1
01	Body	UPVC/CPVC/PPH	1

Unit: MM

SIZE	d	d1				d2				D	L	L1
		ANSI	DIN	JIS	CNS	ANSI	DIN	JIS	CNS			
1/2"(15)	15	21.54	20.30	22.40	22.40	21.23	20.10	21.73	21.90	54.00	106.70	22.30
3/4"(20)	20	26.87	25.30	26.45	26.40	26.57	25.10	25.69	25.90	63.00	135.00	25.50
1"(25)	25	33.65	32.30	32.55	34.50	33.27	32.10	31.70	33.90	73.50	149.50	28.60
1-1/4"(32)	32	42.42	40.30	38.60	42.50	42.04	40.10	37.65	41.90	84.50	178.50	32.00
1-1/2"(40)	40	48.56	50.30	48.70	48.60	48.11	50.10	47.74	47.90	98.00	199.50	35.00
2"(50)	50	60.63	63.30	60.80	60.60	60.17	63.10	59.78	59.90	119.00	234.50	38.00



1 The axial connection of Disc and adjust seat makes Disc more flexible and stable, and the water sealing effect is better;
2 Big impurity is prevented by mesh. It makes flow of liquid more smooth.
3 The groove where the washer is placed has been fashioned to ensure flatness and seal reliability;
4 In order to enhance intensity, joint of inside the nut and union end is modified from vertical angle to oblique angle and bulgy circle rib is added.

XIAMEN SANIDENG PLASTICS INDUSTRY CO.,LTD

Add.: NO.169,TONGHONG ROAD,TONG'AN DISTRICT,XIAMEN 361100,FUJIAN,CHINA
Tel: 86-592-7197133 Fax: 86-592-7197120 Web: www.sanking.cn

Swing Foot Valve

ADVANTAGES:

1) Materials meet drinking water standard;
2) Material is Nano-modified which increases resistance to pressure and impact of product;
3) ANTI-UV absorbent is added to raw material in order to increase weather resistance and ageing resistance of product;
4) Can be assembled vertically or horizontally.



DESCRIPTION:

1) Material:UPVC,CPVC,PPH,PVDF
2) Size: 2½" - 6"; 75mm - 160mm ; DN65 - DN150
3) Standard: ANSI, DIN, JIS, CNS
4) Joint End: Socket or Threaded(NPT,PT,BSPF)
5) Working Pressure: 150 PSI
6) Operating Temperature: UPVC(5~55℃);CPVC&PPH(5~90℃);PVDF(-20~120℃)
7) Valve body color : UPVC(dark gray),CPVC(light gray),PPH(light yellow),PVDF(ivory)
8) The minimum waterstop pressure ≥0.03kg

SPECIFICATIONS:

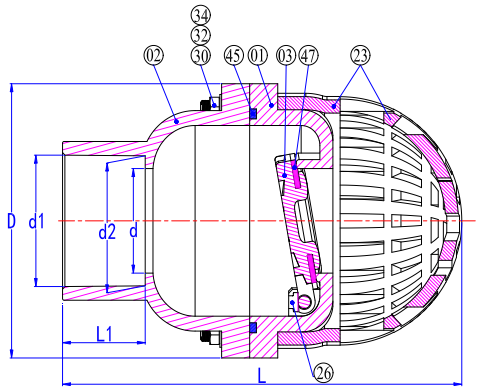

ITEM	PART	MATERIAL	QTY
47	Washer	EPDM/VITON	1
45	O-ring	EPDM/VITON	1
34	Nut	SUS304/SUS316	8~12
32	Bolt washer	SUS304/SUS316	8～12
30	Bolt	SUS304/SUS316	8～12
26	Snap ring	UPVC/CPVC	2
23	Mesh enclosure	UPVC/CPVC/PPH/PVDF	1
03	Disc	UPVC/CPVC/PVDF	1
02	Upper body	UPVC/CPVC	1
01	Lower body	UPVC/CPVC	1

Unit: MM

Size	d	d1				d2				D	L	L1
		ANSI	DIN	JIS	CNS	ANSI	DIN	JIS	CNS			
2-1/2"	65	73.38	75.30	76.60	76.70	72.85	75.10	75.68	75.90	165.00	235.50	47.00
3"	75	89.31	90.44	89.60	89.70	88.70	89.96	88.55	88.90	172.00	256.00	53.00
4"	95	114.76	110.52	114.70	115.00	114.10	109.98	113.60	113.80	205.00	321.50	62.00
6"	150	168.83	160.50	166.00	166.20	168.00	160.20	164.63	164.60	290.00	445.00	86.50