XIAMEN SANIDENG PLASTICS INDUSTRY CO.,LTD

Add.: No.169,TongHong Road,TongAn District, XiaMen 361100, FuJian, China
Tel: 86-592-7197133 Fax: 86-592-7197120 Web: www.sanking.cn

Flanged Swing Foot Valve

ADVANTAGES:

1) Materials meet drinking water standard;
2) Material is Nano-modified which increases resistance to pressure and impact of product;
3) ANTI-UV absorbent is added to raw material in order to increase weather resistance and ageing resistance of product;
4) Can be assembled vertically or horizontally.



DESCRIPTION:

1) Material: UPVC,CPVC
2) Size: 2½" - 4"; 75mm - 110mm ; DN65 - DN100
3) Standard: ANSI, DIN, JIS
4) Joint End: Flanges
5) Working Pressure: 150 PSI
6) Operating Temperature: UPVC(5~55℃);CPVC(5~90℃)
7) Valve body color : UPVC(dark gray),CPVC(light gray),
8)The minimum waterstop pressure ≥0.03kg;

SPECIFICATIONS:

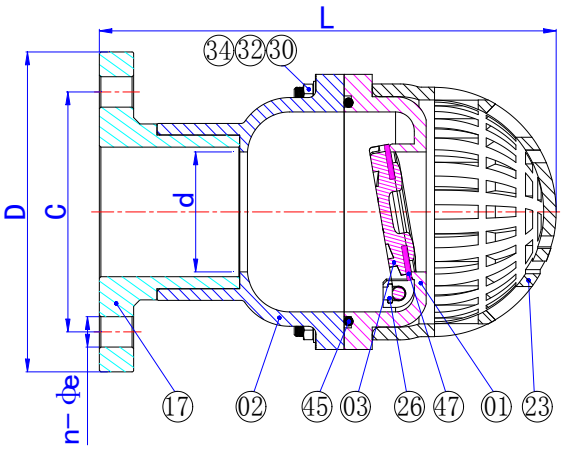

ITEM	PART	MATERIAL	QTY
47	Washer	EPDM/VITON	1
45	O-ring	EPDM/VITON	1
34	Nut	SUS304/SUS316	8～12
32	Bolt washer	SUS304/SUS316	8～12
30	Bolt	SUS304/SUS316	8～12
26	Snap ring	UPVC/CPVC	2
23	Mesh enclosure	UPVC/CPVC/PPH/PVDF	1
17	Flange	UPVC/CPVC/PPH/PVDF	1
03	Disc	UPVC/CPVC/PVDF	1
02	Upper body	UPVC/CPVC	1
01	Lower body	UPVC/CPVC	1

Unit: MM

SIZE	d	D	L	C			n-φe	
				ANSI	JIS	DIN	ANSI	DIN/JIS
2-1/2"	63.00	182.00	273.50	139.50	140.00	145.00	4-19	
3"	75.00	200.00	293.00	152.40	150.00	160.00	4-19	8-19
4"	95.00	228.00	362.50	190.50	175.00	180.00	8-19	

XIAMEN SANIDENG PLASTICS INDUSTRY CO.,LTD

Add.: No.169,TongHong Road,TongAn District, XiaMen 361100, FuJian, China
Tel: 86-592-7197133 Fax: 86-592-7197120 Web: www.sanking.cn

SANKING

Flanged Swing Foot Valve

ADVANTAGES:

1) Materials meet drinking water standard;
2) Material is Nano-modified which increases resistance to pressure and impact of product;
3) ANTI-UV absorbent is added to raw material in order to increase weather resistance and ageing resistance of product;
4) Can be assembled vertically or horizontally.



DESCRIPTION:

1) Material: UPVC,CPVC
2) Size: 5" - 6"; 140mm - 160mm ; DN125 - DN150
3) Standard: ANSI, DIN, JIS
4) Joint End: Flanges
5) Working Pressure: 150 PSI
6) Operating Temperature: UPVC(5~55℃);CPVC(5~90℃)
7) Valve body color : UPVC(dark gray),CPVC(light gray),
8)The minimum waterstop pressure ≥0.03kg;

SPECIFICATIONS:

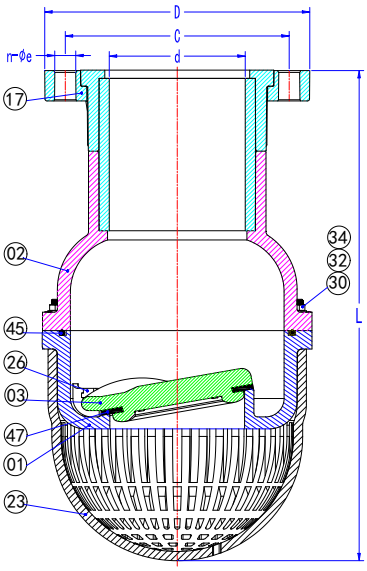

6″图示

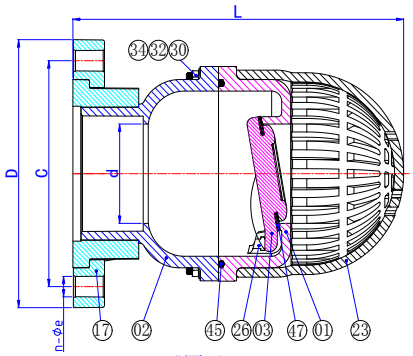

5″图示

ITEM	PART	MATERIAL	QTY
47	Washer	EPDM/VITON	1
45	O-ring	EPDM/VITON	1
34	Nut	SUS304/SUS316	8～12
32	Bolt washer	SUS304/SUS316	8～12
30	Bolt	SUS304/SUS316	8～12
26	Snap ring	UPVC/CPVC	2
23	Mesh enclosure	UPVC/CPVC/PPH/PVDF	1
17	Flange	UPVC/CPVC/PPH/PVDF	2
03	Disc	UPVC/CPVC/PVDF	1
02	Upper body	UPVC/CPVC	1
01	Lower body	UPVC/CPVC	1

Unit: MM

SIZE	d	D		L	C		n-φe	
		ANSI	DIN/JIS	ANSI/DIN/JIS	ANSI	DIN/JIS	ANSI	DIN/JIS
5"	95.00	256.00	250.00	329.50	216.00	210.00	8-22	8-23
6"	150.00	285.00	285.00	533.00	241.00	240.00	8-22	8-22

XIAMEN SANIDENG PLASTICS INDUSTRY CO.,LTD

Add.: No.169,TongHong Road,TongAn District, XiaMen 361100, FuJian, China
Tel: 86-592-7197133 Fax: 86-592-7197120 Web: www.sanking.cn

SANKING

Flanged Swing Foot Valve



ADVANTAGES:

1) Materials meet drinking water standard
2) Material is Nano-modified which increases resistance to pressure and impact of product;
3) ANTI-UV absorbent is added to raw material in order to increase weather resistance and ageing resistance of product;
4) Can be assembled vertically or horizontally

DESCRIPTION:

1) Material: UPVC,CPVC
2) Size:8"; 225mm ; DN200
3) Standard: ANSI, DIN
4) Joint End: Flanges
5) Working Pressure: 150 PSI
6) Operating Temperature: UPVC(5~55℃);CPVC(5~90℃)
7) Valve body color : UPVC(dark gray),CPVC(light gray),
8)The minimum waterstop pressure ≥0.03kg;

SPECIFICATIONS:

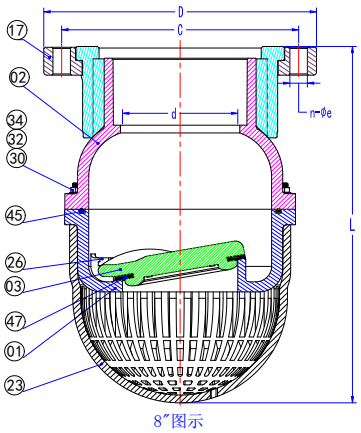

8″图示

ITEM	PART	MATERIAL	QTY
47	Washer	EPDM/VITON	1
45	O-ring	EPDM/VITON	1
34	Nut	SUS304/SUS316	12
32	Bolt washer	SUS304/SUS316	12
30	Bolt	SUS304/SUS316	12
26	Snap ring	UPVC/CPVC	2
17	Flange	UPVC/CPVC/PPH/PVDF	2
03	Disc	PVDF	1
02	Upper body	UPVC/CPVC	1
01	Lower body	UPVC/CPVC	1

Unit: MM

SIZE	d	D	L	C	n-φe
8"	150.00	343.00	460.00	298.00	8-23.