PVC-U Single union ball valves SV
PVC-U Valvole a sfera monoghiera SV

SV valve is a PVC-U single union ball valve, ideal for applications in the field of agriculture, swimming pools, light water treatment and non-critical chemicals.

La valvola SV è una valvola a sfera monoghiera in PVC-U, ideale per applicazioni in agricoltura, piscine, trattamento delle acque e prodotti chimici non critici.

- Full bore ball locked in place on both sides.
  Sfera di tipo flottante a passaggio totale e bloccata da entrambi i lati.
- Machined ball to ensure the best sealing.
  Sfera lavorata per garantire la miglior tenuta.
- Sealing adjustment and disassembling by key incorporated on the handle.
  Possibilità di regolazione del supporto guarnizioni tramite la chiave incorporata nella maniglia.
- PVC-U compound fit for contact with potable water according to European, UK and USA regulations.
  PVC-U idoneo al contatto con acqua potabile secondo le normative in vigore in Europa, UK, e USA.
- Marine Application approval.
  Certificata per applicazioni navali.
- Compliant with the requirements of Pressure Equipment Directive 2014/68/EU, Annex III, Module A2.
  Conforme ai requisiti della Direttiva Europea 2014/68/EU sulle attrezzature in pressione, Allegato III, Modulo A2.

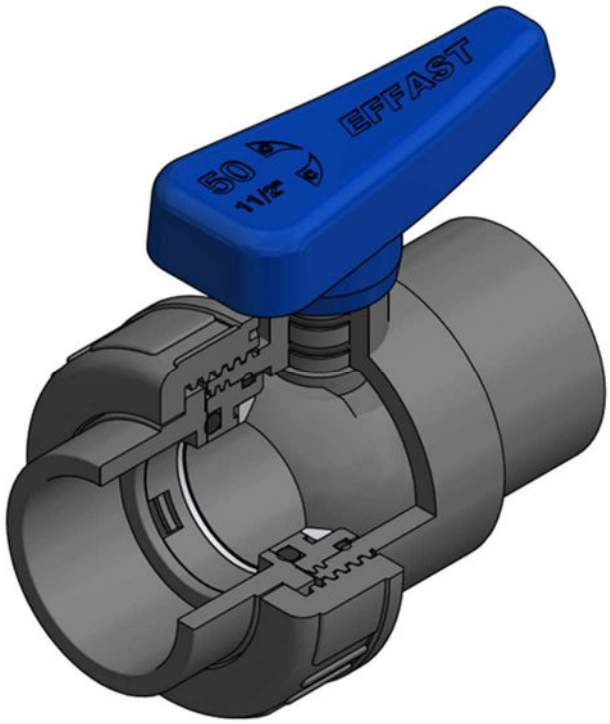

TECHNICAL FEATURES / CARATTERISTICHE TECNICHE	
NOMINAL PRESSURE / *PRESSIONE NOMINALE*	PN 16 (20°C)
DIMENSIONS / *DIMENSIONI*	DN 15 ÷ DN 100 (d.20 ÷ 110 mm – 1/2" ÷ 4")
VALVE MATERIAL / *MATERIALE VALVOLA*	PVC-U
SEALS MATERIAL / *MATERIALE GUARNIZIONI*	O-rings: EPDM / *O-ring: EPDM* Ball seats: PE / *Tenute della sfera: PE*
TEMPERATURE RANGE / *TEMPERATURA*	0°C ÷ 60°C
COUPLING STANDARDS / *GIUNZIONI*	Solvent welded sockets: metric, BS / *Manicotti incollaggio: metrici, BS* BSPP threaded sockets / *Manicotti filettati femmina BSPP* BSPP threaded socket - spigot end / *Manicotto filettato BSPP femmina - estremità filettata maschio* BSPP threaded socket - compression joint / *Manicotto filettato BSPP femmina - giunto a compressione*
CONTROL OPTIONS / *OPZIONI DI COMANDO*	Hand-operated / *Manuale*

Certifications and approvals: only for items declared on Official Listing or certificates. / *Certificazioni: solo per gli articoli dichiarati nelle Official Listing o nei certificati stessi.*

PVC-U Single union ball valves SV
PVC-U Valvole a sfera monoghiera SV

Operating pressure / *Pressione di esercizio*

Maximum operating pressure for PVC-U: according to temperature as shown in graph.
Massima pressione di esercizio per il PVC-U: secondo quanto indicato nel grafico in figura.

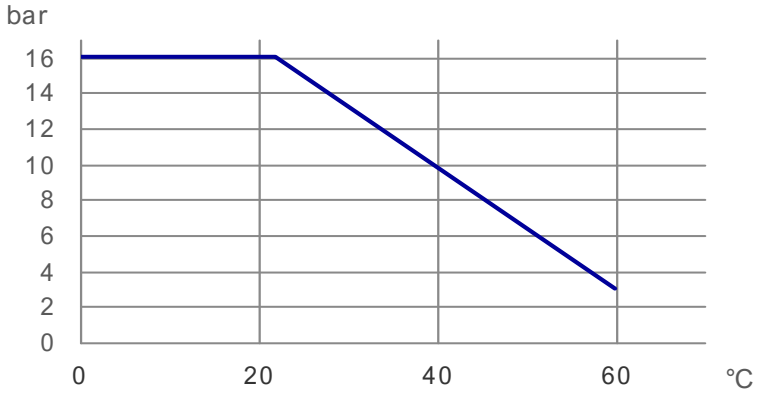

Pressure loss / *Perdite di carico*

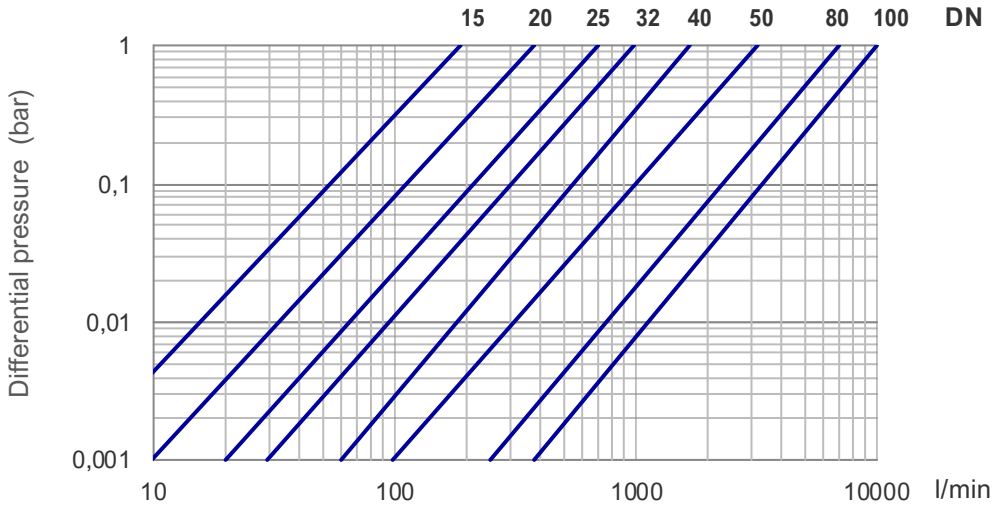

Flow rate coefficient Kv100 / *Coefficiente di flusso Kv100*

At Δp = 1 bar / *Per Δp = 1 bar*

DN	DN 15	DN 20	DN 25	DN 32	DN 40	DN 50	DN 80	DN 100
l/min	190	380	700	1000	1700	3200	7000	10000

Torque force at maximum pressure rate / *Coppia di chiusura alla massima pressione*

DN	DN 15	DN 20	DN 25	DN 32	DN 40	DN 50	DN 80	DN 100
Nm	1.5	2	3	5	7	10	24	30

PVC-U Single union ball valves SV
PVC-U Valvole a sfera monoghiera SV

Components / *Componenti*

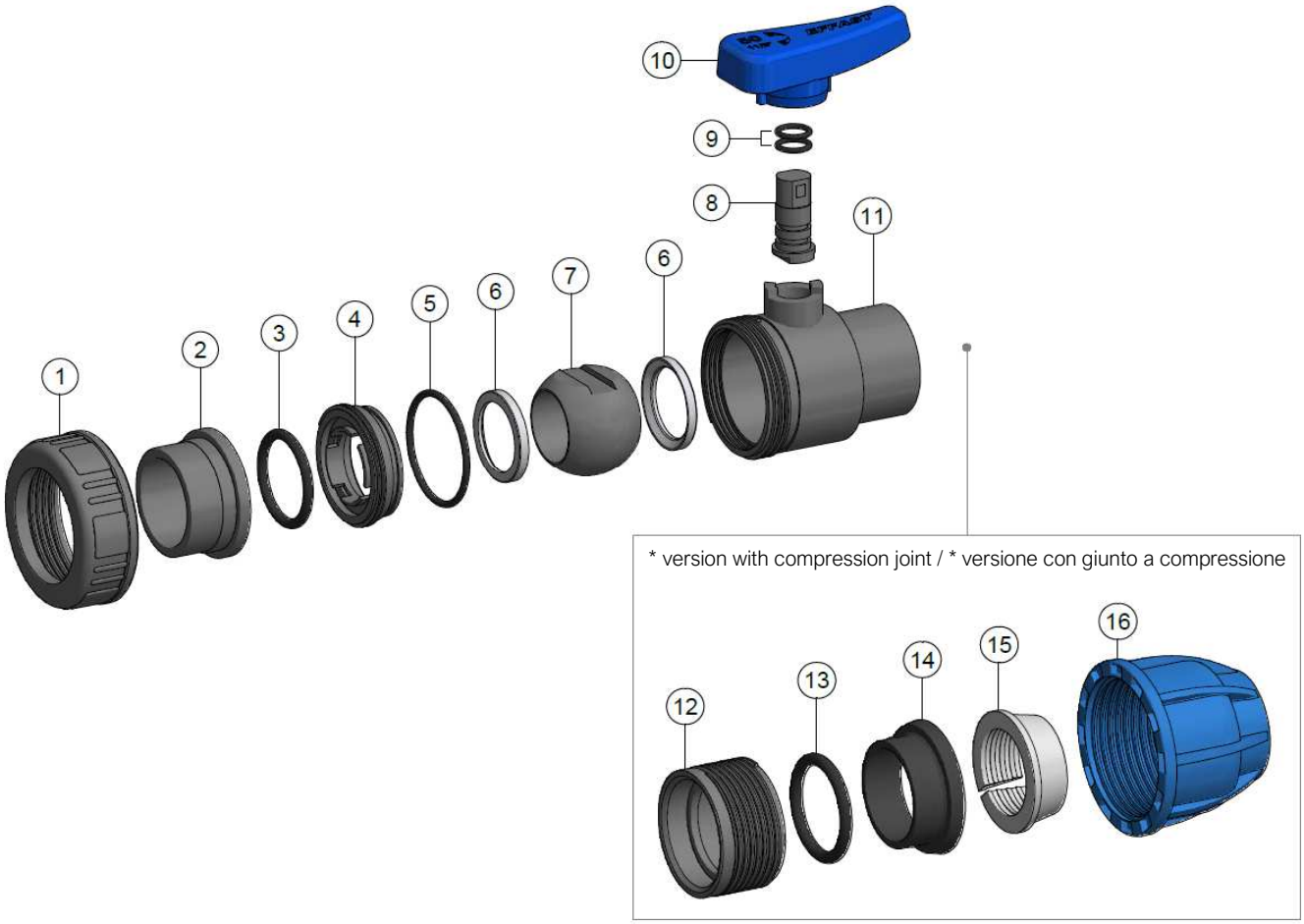

n.	COMPONENT	MATERIAL	Qty
1	Nut / *Ghiera*	PVC-U	1
2	Socket / *Manicotto*	PVC-U	1
3	Socket O-ring / *O-ring manicotto*	EPDM	1
4	Gasket carrier / *Supporto guarnizioni*	PVC-U	1
5	Body O-ring / *O-ring corpo*	EPDM	1
6	Ball seat / *Tenuta sfera*	PE	2
7	Ball / *Sfera*	PVC-U	1
8	Stem / *Asta*	PVC-U	1

n.	COMPONENT	MATERIAL	Qty
9	Stem O-ring / *O-ring asta*	EPDM	2
10	Handle / *Maniglia*	PVC-U	1
11	Body / *Corpo*	PVC-U	1
12*	Adaptor / Adattatore	PVC-U	1
13*	Joint O-ring / O-ring giunto	NBR	1
14*	Blocking bush / Bussola di bloccaggio	PP	1
15*	Clinching ring / Anello di graffaggio	POM	1
16*	Joint nut / Ghiera giunto	PP	1

All descriptions and illustrations in this publication are intended for guidance only and shall not constitute a 'sale by description'. All dimensions given are nominal, while changes can be done on the information, products and specifications from time to time for a variety of reasons, without prior notice. The information in this publication is provided 'as is' on the revision date stated on the sheet. Updates will not be issued automatically. This information is not intended to have any legal effect, whether by way of advice, representation or warranty (express or implied). We accept no liability whatsoever (to the extent permitted by law) if you place any reliance on this publication you must do so at your own risk. All rights reserved. Copyright in this publication belongs to Polypipe Italia and all such copyright may not be used, sold, copied or reproduced in whole or part in any manner in any media to any person without prior consent. EFFAST is a registered trademark."

PVC-U Single union ball valves SV

PVC-U Valvole a sfera monoghiera SV

BSPP THREADED SOCKETS
MANICOTTI FILETTATI BSPP

- Thread according to ISO 228-1 / *Filettatura secondo ISO 228-1*
- Seals: EPDM / *Guarnizioni: EPDM*
- Ball seats: PE / *Tenute della sfera: PE*

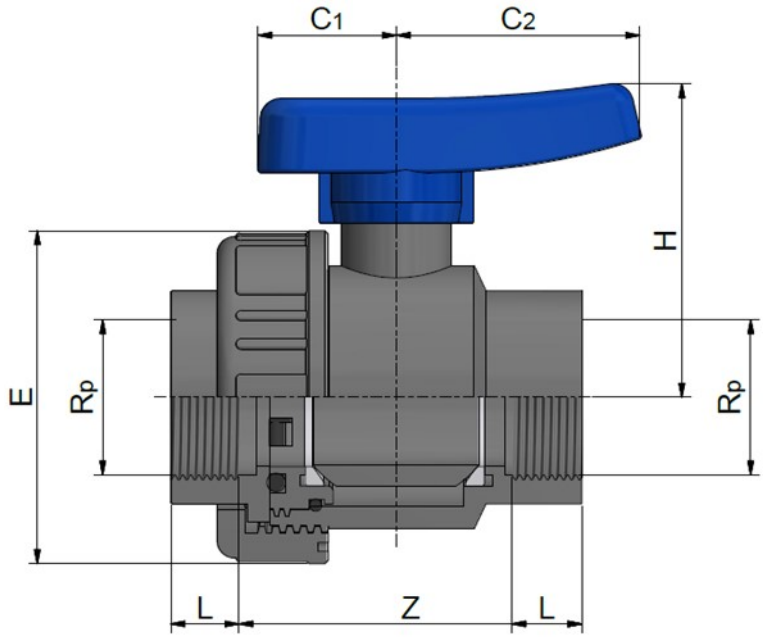

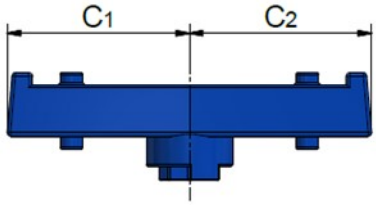

Handle d.75-110 / *Maniglia d.75-110*

Code EPDM	Rp	DN	L min	Z max	H	C1	C2	E	PN	Weight (g)
BERSVE016A	3/8"	15	11,4	57,2	50	22	42	49	16	140
BERSVE020B	1/2"	15	15	50	50	22	42	49	16	140
BERSVE025C	3/4"	20	16,3	59,4	58	24	49	60	16	200
BERSVE032D	1"	25	19,5	67	69	26	59	69	16	300
BERSVE040E	1"1/4	32	21,4	78,2	76	32	65	80	16	450
BERSVE050F	1"1/2	40	21,4	87,2	92	40	71	96	16	690
BERSVE063G	2"	50	25,7	98,6	104	45	79	116	16	1150
BERSVE075H	2"1/2	65	30,2	168,6	145	84,5	84,5	167	16	3050
BERSVE090I	3"	80	33,3	146,4	145	84,5	84,5	167	16	3200
BERSVE110L	4"	100	39,3	205,4	170	102	102	209	16	5400

NSF and WRAS certifications: only for valves with EPDM seals. Certifications and approvals are related to items declared on Official Listing or certificates. /
Certificazioni NSF e WRAS: valide solo per le valvole con guarnizioni EPDM. Le certificazioni si riferiscono ai prodotti dichiarati nelle Official Listing o sui certificati stessi.

All descriptions and illustrations in this publication are intended for guidance only and shall not constitute a 'sale by description'. All dimensions given are nominal, while changes can be done on the information, products and specifications from time to time for a variety of reasons, without prior notice. The information in this publication is provided 'as is' on the revision date stated on the sheet. Updates will not be issued automatically. This information is not intended to have any legal effect, whether by way of advice, representation or warranty (express or implied). We accept no liability whatsoever (to the extent permitted by law) if you place any reliance on this publication you must do so at your own risk. All rights reserved. Copyright in this publication belongs to Polypipe Italia and all such copyright may not be used, sold, copied or reproduced in whole or part in any manner in any media to any person without prior consent. EFFAST is a registered trademark."