XIAMEN SANIDENG PLASTICS INDUSTRY CO.,LTD

Address: No.169,TongHong Road,TongAn District, XiaMen 361100, FuJian, China
Tel: 86-592-7197133 Fax: 86-592-7197120 Group site: www.sanking.cn

New Compact Ball Valve-Fusion type

ADVANTAGES:

1) Enhanced hermeticity;
2) Smooth opening and closing thanks to a lower torque;
3) Replaceable ergonomic handle;
4) Material is Nano-modified which increases resistance to pressure and impact of product;
5) ANTI-UV absorbent is added to raw material in order to increase weather resistance and ageing resistance of product;
6) 100% pressure testing before leaving the factory;
7) Easy differentiation from fake SANKING Ball Valves and poor quality imitations.



DESCRIPTION:

1) Material:UPVC
2) Size: 1/2"-2" ; 20mm - 63mm ; DN15 - DN50
3) Joint End: Socket, Threaded NPT, BSPF and PT
4) Standard: ANSI, DIN, JIS, CNS
5) Working Pressure: 150 PSI
6) Operating Temperature:UPVC(0~45 ℃)
7) Handle color : red, blue
   Valve body color :UPVC(Dark Gray / White)

SPECIFICATIONS:

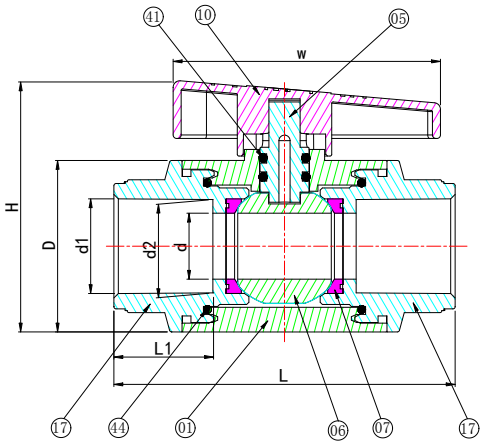

ITEM	PART	MATERIAL	QTY
44	Union End O-ring	EPDM/VITON	2
41	Stem O-ring	EPDM/VITON	2
17	Union End	UPVC	2
10	Handle	ABS	1
07	Seat	TPV	2
06	Ball	UPVC	1
05	Stem	UPVC	1
01	Body	UPVC	1

UNIT: mm

SIZE	d	d1				d2				D	L	L1	H	W	operating torque (N·M)
		ANSI	DIN	JIS	CNS	ANSI	DIN	JIS	CNS						
1/2"(15)	15	21.54	20.3	22.2	22.2	21.23	20	21.9	21.9	39	77	22.2	57	60	3
3/4"(20)	20	26.87	25.31	26.2	26.2	26.57	25	25.9	25.9	47.4	91.7	26	68.5	68	3.5
1"(25)	25	33.65	32.33	32.26	34.5	33.27	32	31.9	33.9	55.3	102.5	28.6	82	78.5	4
1-1/4"(32)	32	42.42	40.30	38.60	42.50	42.04	40.10	37.65	41.90	70.00	125.70	35.00	102.00	100.00	5.00
1-1/2"(40)	40	48.56	50.30	48.70	48.60	48.11	50.10	47.74	47.90	81.00	136.50	37.00	121.50	130.00	6.00
2"(50)	50	60.63	63.30	60.80	60.60	60.17	63.10	59.78	59.90	98.00	149.30	38.00	137.00	130.00	6.00

DESIGNS:

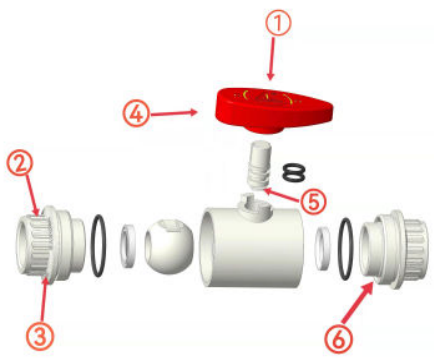

1.Offical SANKING mark;

2.New high relief ribs facilitate fripping during installation,more beautiful and more in line with industrial aesthetics;

3.SANKING logo in high relief ,easy differentiation from fake SANKING and poor quality

4.New wider and extended handle facilitates valve operation .
Significant reduction of the torque.

5. Bulgy circular cone is changed to two sides planes, which makes it easier to process and more accurate;

6. Buckle type change to Fusion connection makes better sealing performance and improved pressure bearing capacity.