TRUE UNION (DOUBLE UNION) BALL VALVE

TYPE: FLANGED CD300

NSF 14/NSF 61

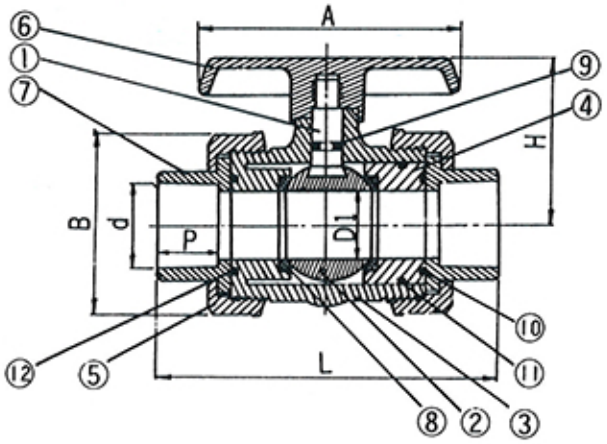

SOCKET & SCREW TYPE

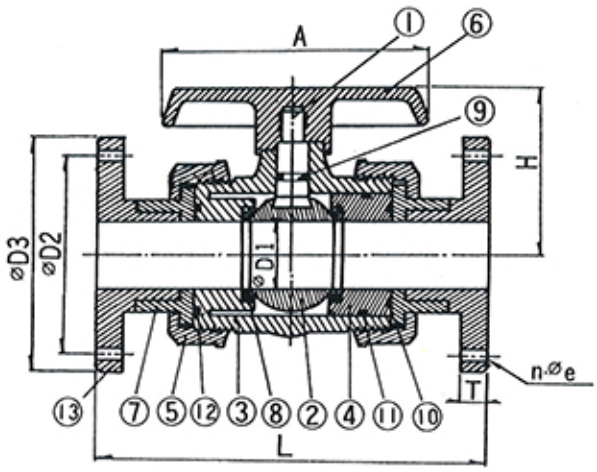

FLANGE TYPE

MATERIALS OF CONSTRUCTION

Item	Parts	Pcs	Materials	Item	Parts	Pcs	Materials
①	Stem	1	PP	⑧	Seat	2	PTFE
②	Ball	1	PP	⑨	Stem O-ring	1	EPDM
③	Body	1	PP	⑩	Seat Carrier O-ring	1	EPDM
④	Seat Carrier	1	PP	⑪	Body O-ring	1	EPDM
⑤	Union Nut	2	PP	⑫	Solid End O-ring	1	EPDM
⑥	Handle	1	ABS	⑬	Flange	2	PP
⑦	Connector	2	PP				

ANSI Unit: inch

Nominal Nominal Pipe Size	D1	D2	D3	d		e	n	P	L			A	T	H	B	Test Press lb/cm²
				Socket	Thread				Socket	Thread	Flange					
15(1/2")	0.59	2.375	3.500	0.840	NPT1/2	0.625	4	0.875	4.53	4.53	5.98	2.60	0.591	2.01	2.09	222
20(3/4")	0.748	2.750	3.875	1.050	NPT3/4	0.625	4	1.000	4.92	4.92	6.54	2.95	0.630	2.56	2.52	222
25(1")	0.98	3.125	4.250	1.315	NPT1	0.625	4	1.125	5.35	5.35	7.05	3.35	0.669	2.80	2.87	222
32(1-1/4")	1.57	3.500	4.625	1.660	NPT1 1/4	0.625	4	1.250	7.01	7.01	8.70	4.29	0.669	3.39	3.86	222
40(1-1/2")	1.57	3.875	5.000	1.900	NPT1 1/2	0.625	4	1.375	7.01	7.01	8.70	4.29	0.709	3.39	3.86	222
50(2")	1.89	4.750	6.000	2.375	NPT2	0.750	4	1.500	7.80	7.80	9.76	5.28	0.787	4.09	4.61	222
65(2-1/2")	2.56	5.500	7.000	2.875	NPT2 1/2	0.750	4	1.750	8.82	8.82	10.91	7.48	0.787	5.51	5.91	148
80(3")	3.07	6.000	7.500	3.500	NPT3	0.750	4	1.875	10.87	10.87	12.95	9.06	0.866	6.50	7.24	148
100(4")	3.35	7.500	9.000	4.500	NPT4	0.750	8	2.250	14.25	14.25	16.53	10.79	0.866	6.77	7.83	148