Data sheet

valid from: 12/10/22



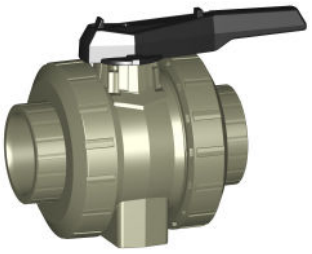

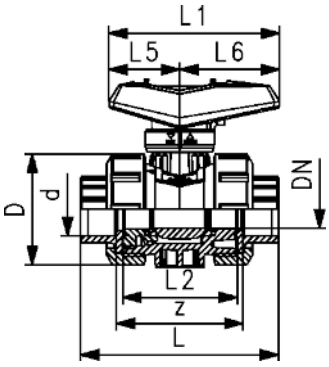

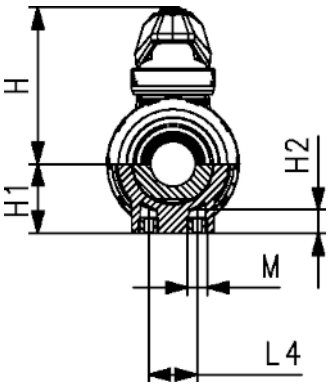

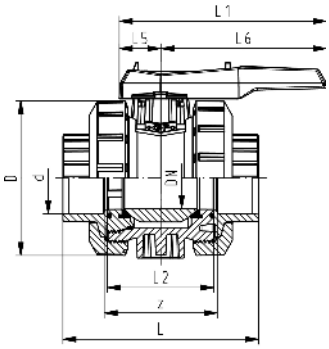

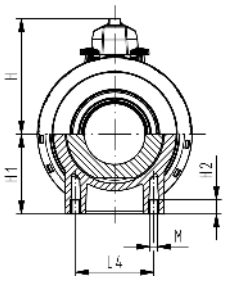

PROGEF Standard Ball valve type 546 Pro
With fusion sockets metric

Model:

- Material: PP-H
- Lockable lever as standard (DN10-DN50)
- For easy installation and removal
- Ball seat PTFE
- Integrated stainless steel mounting inserts
- Z-dimension, valve end and union nut **are compatible** with type 546 (1st Generation)

Option:

- Interface-module with position feedback sensor, incl. LED feedback (DN10-50)
- Manual spring return lever ("Dead man") (DN10-25)
- Pneumatic or electric actuators from GF
- Individual configuration of the valve possible
- Multifunctional module with integrated limit switches (DN65-100)

d (mm)	DN (mm)	PN (bar)	kv-value (Δp=1 bar) (l/min)	EPDM Code	FKM Code	FFKM Code	Weight (kg)
16	10	10	71	**167 546 401**	**167 546 411**	**167 546 721**	0.115
20	15	10	185	**167 546 402**	**167 546 412**	**167 546 722**	0.123
25	20	10	350	**167 546 403**	**167 546 413**	**167 546 723**	0.184
32	25	10	700	**167 546 404**	**167 546 414**	**167 546 724**	0.258
40	32	10	1000	**167 546 405**	**167 546 415**	**167 546 725**	0.451
50	40	10	1600	**167 546 406**	**167 546 416**	**167 546 726**	0.617
63	50	10	3100	**167 546 407**	**167 546 417**	**167 546 727**	1.130
75	65	10	5000	**167 546 408**	**167 546 418**		3.335
90	80	10	7000	**167 546 409**	**167 546 419**		5.500
110	100	10	11000	**167 546 410**	**167 546 420**		8.700

d (mm)	D (mm)	H (mm)	H1 (mm)	H2 (mm)	L (mm)	L1 (mm)	L2 (mm)	L4 (mm)	L5 (mm)	L6 (mm)	M	z (mm)
16	50	61	27	12	93	82	56	25	35	47	M6	67
20	50	61	27	12	95	82	56	25	35	47	M6	67
25	58	74	30	12	108	106	65	25	44	62	M6	76
32	68	80	36	12	118	106	71	25	44	62	M6	82
40	84	95	44	15	137	131	85	45	57	74	M8	97
50	97	102	51	15	147	131	89	45	57	74	M8	101
63	124	117	64	15	168	152	101	45	66	86	M8	114
75	166	150	85	15	233	270	136	70	64	206	M8	171
90	200	161	105	15	253	270	141	70	64	206	M8	183
110	238	178	123	22	293	320	164	120	64	256	M12	211

The technical data are not binding. They neither constitute expressly warranted characteristics nor guaranteed properties nor a guaranteed durability. They are subject to modification. Our General Terms of Sale apply.

Georg Fischer Piping Systems Ltd, Postfach, CH-8201 Schaffhausen/Switzerland
Phone +41 -(0)52-631 1111
e-mail: info.ps@georgfischer.com
Internet: http://www.gfps.com